BJMPumps

SKXF HT SINGLE PHASE SERIES

	Pump Model	SKX750CSSF	SKX1500CSSF
Pos. No.	**Part Description**	**Part #**	**Part #**
01-2	Stand Only	201988	201995
02	Suction Cover, Hi-Chrome		
05	Impeller	202951	204628**
07	Pump Housing	202176	202172
07-1	O-Ring (Kit Only)	Kit	Kit
08	Oil Chamber Cover	202214	202214
08-1	O-Ring (Kit Only)	Kit	Kit
09	Lip Seal FKM	202232	202232
13	Mechanical Seal FKM	204240	204240
14	Lower Ball Bearing (*=qty 2 Needed)	200958	200958
14-2	Lower Bearing Retainer	202279	202279
15	Impeller Shim Kit (Required)	200481	200481
17	Rotor w/ Shaft 115/230V, 1PH	204061	204735
18	Stator w/ Casing 115V, 1PH (High-Temp)	201038	-
18	Stator w/ Casing 230V, 1PH (High-Temp)	201039	201041
19	Wire Connection Kit*	204211	204211
20	Upper Ball Bearing	200967	200967
21A	Oil Chamber/Motor Housing	202197	202197
21A-1	O-Ring (Kit Only)	Kit	Kit
21B	Motor Cover Upper	202368	202368
26	Pump Top Cover (w/ Sensor opening)	202434	202434
26-1	O-Ring (Kit Only)	Kit	Kit
27	Power Cable w/ Gland- 115V, 1PH (High-Temp)	202783	-
27	Power Cable w/ Gland- 230V, 1 PH (High-Temp)	202784	202783
27-1	O-Ring (Kit Only)	Kit	Kit
27-2	Seal Minder® Cable (High-Temp)	201743	201743
27-2-1	O-Ring Kit Only	Kit	Kit
31D	Seal Minder® Probe	202408	202408

Seal Minder® is a registered trademark of Industrial Flow Solutions Operating, LLC. All rights reserved.

Last updated on 5/20/2020

© 2020 Industrial Flow Solutions Operating, LLC. All rights reserved.

BJMPumps

SKXF HT SINGLE PHASE SERIES

	Pump Model	SKX750CSSF	SKX1500CSSF
Pos. No.	**Part Description**	**Part #**	**Part #**
31E	Ground Wire w/Ring Term.	203145	203145
32	Power Cord Line Clip / Strain Relief	203166	203166
33	Seal Minder® Cable Line Clip	203163	203163
34	Handle / Chain Handle	202517	202517
35	Rod Bolts	202682	202683
38	Discharge Nippple 2"	202532	-
38	Discharge Nipple 3"	-	202535
38E	Discharge Elbow	202571	202559
38E-1	O-Ring, Discharge Elbow FKM	203326	203327
38F	Discharge Flange 2"	202563	-
38F	Discharge Flange 3"	-	202546
38F-1	Bolt - Suction Cover	202723	-
38F-1	O-Ring, 3" Discharge Flange FKM	-	202724
50-01-2	Bolt for Strainer/Stand	203228	203228
50-02	Bolt for Suction Cover	203228	203228
50-07	Screw for Oil Chamber/Motor Housing	203296	203296
50-08	Screw for Oil Chamber Cover	203219	203219
50-11	Screw for Oil Fill	203218	203218
50-11-1	O-Ring (Kit Only)	Kit	Kit
50-12	Screw for Pressure Check	203218	203218
50-12-1	O-Ring (Kit Only)	Kit	Kit
50-14-2	Screw for Bearing Retainer Plate	203219	203219
50-27	Screw for Power Cord	203295	203295
50-27-2	Screw for Seal Minder Cable	203295	203295
50-31E	Screw for Ground Wire	202692	202692
50-32/50-33	Screw for Line Clip	203214	203214
50-34	Screw for Handle	203219	203219
50-38E	Bolt for Discharge Elbow	203294	203271
50-38F	Bolt for Discharge Flange	203229	203294
	O-Ring Kit - FKM	202630	202630
***"F" Series High Temperature Pumps Only**			
**** New Rotor With Shaft Required When Upgrading From 202125 Impeller to 204628 Impeller.**			

Last updated on 5/20/2020

Seal Minder® is a registered trademark of Industrial Flow Solutions Operating, LLC. All rights reserved.
© 2020 Industrial Flow Solutions Operating, LLC. All rights reserved.

BJMPumps

SKX750CSS-F, SKX1500CSS-F

HIGH TEMPERATURE

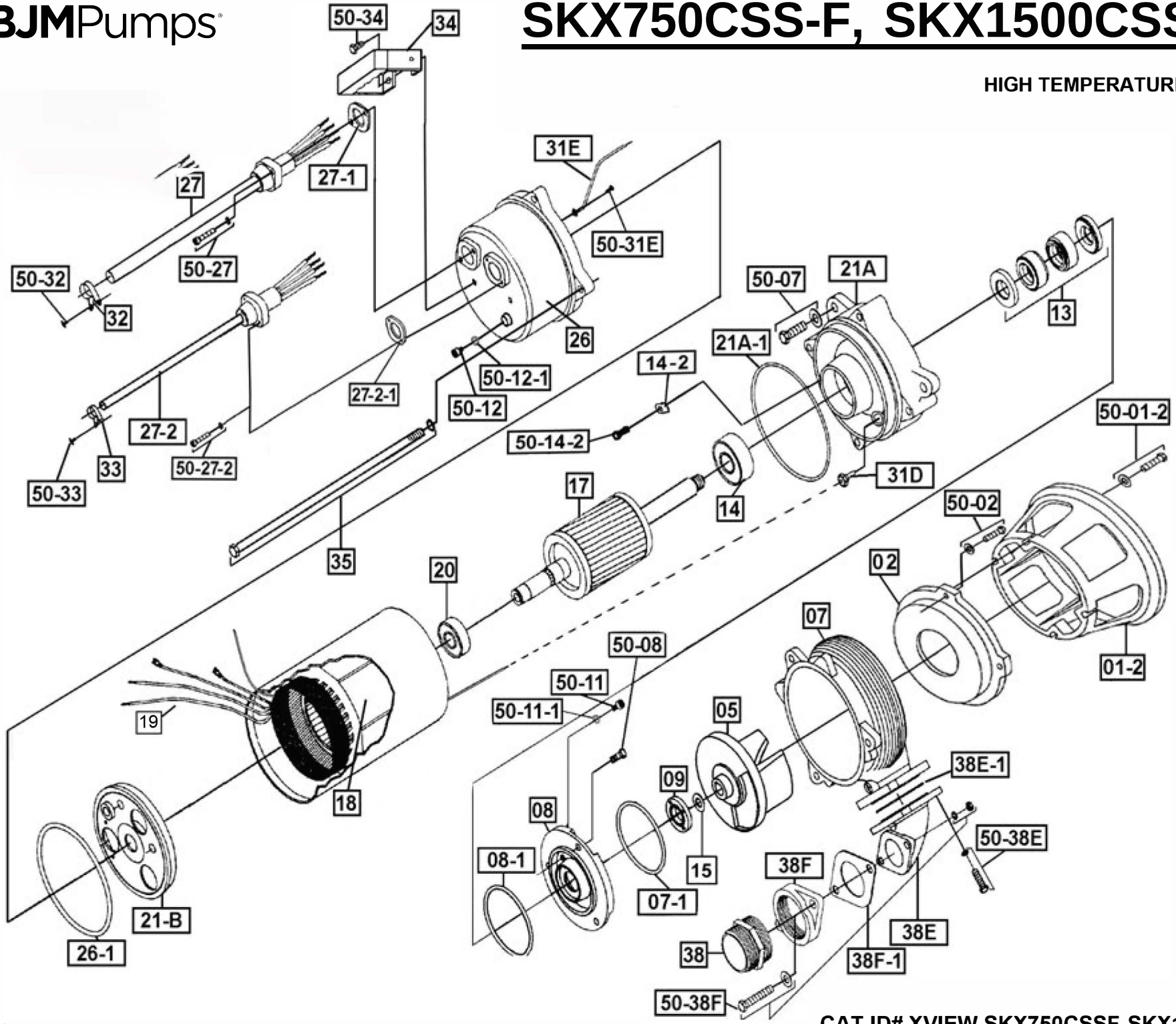

05-20-2020

CAT ID# XVIEW SKX750CSSF-SKX1500CSSF

BJMPumps

SKXF HIGH TEMP SERIES

	Pump Model	SKX08CSSF	SKX15CSSF	SKX22CSSF	SKX37CSSF	SKX55CSSF	SKX75CSSF	SKX110CSSF	SKX150CSSF
Pos. No.	**Part Description**	**Item #**	**Item #**	**Item #**	**Item #**	**Item #**	**Item #**	**Item #**	**Item #**
01-2	Stand Only	201988	201995	201989	201994	201999	201999	202001	202001
02	Suction Cover	-	-	-	-	202881	202881	202040	202040
03	Impeller Nut	202894	202894	202894	202894	202897	202897	202897	202897
04	Impeller Washer	202907	202907	202907	202907	202917	202917	202917	202917
05	Impeller	202958	204628	204629	204630	204568	204570	202946	202948
06	Impeller Key	202140	202140	202140	202140	202146	202146	202146	202987
07	Pump Housing	202176	202172	202177	202181	202190	202190	202194	202194
07-1	O-Ring (Kit Only)	Kit	Kit	Kit	Kit	-	-	-	-
08	Oil Chamber Cover	202214	202214	202219	202219	202222	202222	202224	202224
08-1	O-Ring (Kit Only)	Kit	Kit	Kit	Kit	Kit	Kit	Kit	Kit
09	Lip Seal FKM	202232	202232	202235	202235	202243	202243	202243	202243
13	Mechanical Seal FKM	204240	204240	204243	204243	200307	200307	200307	200307
13-2	Mechanical Seal Retainer	-	-	-	-	202273	202273	202273	202273
14	Lower Ball Bearing (*=qty 2 Needed)	200958	200958	200959	200959	200962	200962	200962*	200962*
14-2	Lower Bearing Retainer	202279	202279	202279	202279	203075	203075	203076	203076
14-3	Lock Nut & Lock Washer	-	-	-	-	-	-	200424	200424
15	Impeller Shim Kit (Required)	200480	200480	200480	200480	200478	200478	200478	200478
17	Rotor w/ Shaft, 3PH	204021	204022	204023	204024	204027	204028	204029	204030
18	Stator w/ Casing 208V, 3PH	200527	200531	200535	200539	200672	-	-	-
18	Stator w/ Casing 230/460V,3PH	200549	200553	200557	200561	200575	200579	200583	-
18	Stator w/ Casing 460V,3PH	-	-	-	-	-	-	-	200587
18	Stator w/ Casing 575V, 3PH	200591	200595	200599	200603	200619	200625	200632	200639
19	Wire Connection Kit*	204202	204202	204203	204203	204203	204203	CTF	CTF
20	Upper Ball Bearing	200967	200967	200958	200958	200968	200968	200968	200968
20-1	O-Ring (Kit Only)	-	-	-	-	Kit	Kit	Kit	Kit
21A	Oil Chamber/Motor Housing	202197	202197	202198	202198	202200	202200	202201	202201
21A-1	O-Ring (Kit Only)	Kit	Kit	Kit	Kit	Kit	Kit	Kit	Kit
26	Pump Top Cover (w/ Sensor opening)	202436	202436	202438	202438	203130	203130	202444	202444
26-1	O-Ring (Kit Only)	Kit	Kit	Kit	Kit	Kit	Kit	Kit	Kit
27	Power Cable w/ Gland- 3PH(high temp)	201733	201733	203777	203777	203777	203777	203779	203779
27-1	O-Ring (Kit Only)	Kit	Kit	Kit	Kit	Kit	Kit	Kit	Kit
27-2	Seal Minder®/Temp. Sensor Cord (High Temp)	201741	201741	201741	201741	201741	201741	201741	201741
27-2-1	O-Ring Kit Only	Kit	Kit	Kit	Kit	Kit	Kit	Kit	Kit
31D	Seal Minder® Probe	202408	202408	202410	202410	204001	204001	204001	204001
31E	Ground Wire w/Ring Term.	203145	203145	203145	203145	203145	203145	203145	203145
32	Power Cord Line Clip / Strain Relief	203161	203161	202499	202499	202499	202499	202500	202500
33	Seal Minder® Cable Line Clip	203163	203163	203163	203163	203163	203163	203163	203163

Last updated on 5/12/2020

Seal Minder® is a registered trademark of Industrial Flow Solutions Operating, LLC. All rights reserved.
© 2020 Industrial Flow Solutions Operating, LLC. All rights reserved.

BJMPumps

SKXF HIGH TEMP SERIES

	Pump Model	SKX08CSSF	SKX15CSSF	SKX22CSSF	SKX37CSSF	SKX55CSSF	SKX75CSSF	SKX110CSSF	SKX150CSSF
Pos. No.	**Part Description**	**Item #**	**Item #**	**Item #**	**Item #**	**Item #**	**Item #**	**Item #**	**Item #**
34	Handle / Chain Handle	202517	202517	202510	202510	-	-	-	-
34	Lifting Ring	-	-	-	-	202520	202520	202520	202520
35	Bolt - Suction Cover	202684	202685	202686	202687	202676	202677	202678	202679
38	Discharge Nippple 2"	202532	-	-	-	-	-	-	-
38	Discharge Nipple 3"	-	202535	202535	202535	-	-	-	-
38E	Discharge Elbow	202571	202559	202559	202559	202573	202573	202574	202574
38E-1	O-Ring, Discharge Elbow FKM	203326	203327	203327	203327	202818	-	-	-
38E-1	Gasket, Discharge Elbow FKM	-	-	-	-	203211	203211	202664	202664
38F	Discharge Flange 2"	202563	-	-	-	-	-	-	-
38F	Discharge Flange 3"	-	202546	202546	202546	-	-	-	-
38F	Discharge flange 4"	-	-	202553	202553	202576	202576	-	-
38F	Discharge flange 6" ANSI Slip Weld	-	-	-	-	-	-	202549	202549
38F-1	O-Ring 2" Discharge Flange FKM	202723	-	-	-	-	-	-	-
38F-1	O-Ring, 3" Discharge Flange FKM	-	202724	202724	202724	-	-	-	-
38F-1	O-Ring, 4" Discharge Flange FKM	-	-	203328	203328	-	-	-	-
38F-1	Gasket, 4" Discharge Flange FKM	-	-	-	-	202662	202662	-	-
38F-1	Gasket, 6" Discharge Flange FKM	-	-	-	-	-	-	202664	202664
50-01-2	Bolt for Strainer/Stand	203228	203228	203228	203228	203236	203236	203279	203279
50-02	Bolt for Suction Cover	-	-	-	-	203236	203236	203279	203279
50-07	Screw for Oil Chamber/Motor Housing	203296	203296	203296	203296	203271	203271	203280	203280
50-08	Screw for Oil Chamber Cover	203219	203219	203219	203219	203246	203246	203281	203281
50-11	Screw for Oil Fill	203218	203218	203218	203218	203261	203261	203282	203282
50-11-1	O-Ring (Kit Only)	Kit	Kit	Kit	Kit	Kit	Kit	Kit	Kit
50-11V	Air Release Valve	-	-	-	-	202707	202707	202707	202707
50-12	Screw for Pressure Check	203218	203218	203218	203218	203218	203218	203218	203218
50-12-1	O-Ring (Kit Only)	Kit	Kit	Kit	Kit	Kit	Kit	Kit	Kit
50-13-2	Screw for Seal Retainer	-	-	-	-	203214	203214	203214	203214
50-14-2	Screw for Bearing Retainer Plate	203219	203219	203219	203219	203220	203220	203220	203220
50-27	Screw for Power Cord	203295	203295	203246	203246	203246	203246	203246	203246
50-27-2	Screw for Seal Minder® Cable	203295	203295	203295	203295	203295	203295	203295	203295
50-31E	Screw for Ground Wire	202692	202692	202692	202692	202692	202692	202692	202692
50-32/50-33	Screw for Line Clip	203214	203214	-	-	-	-	-	-
50-32-1	Bolt for Power Cord Strain Relief Chain	-	-	-	-	203284	203284	203284	203284
50-34	Screw for Handle	203219	203219	-	-	-	-	-	-
50-38E	Bolt for Discharge Elbow	203294	203271	203271	203271	203276	203276	203278	203278
50-38F	Bolt for Discharge Flange	203229	203294	203294	203294	203277	203277	203278	203278
	O-Ring Kit - FKM	202647	202647	202642	202642	202652	202652	203202	203202

***"F" Series High Temperature Pumps Only**

Last updated on 5/12/2020

Seal Minder® is a registered trademark of Industrial Flow Solutions Operating, LLC. All rights reserved.
© 2020 Industrial Flow Solutions Operating, LLC. All rights reserved.

BJMPumps

SKX08CSSF, SKX15CSSF

HIGH TEMPERATURE

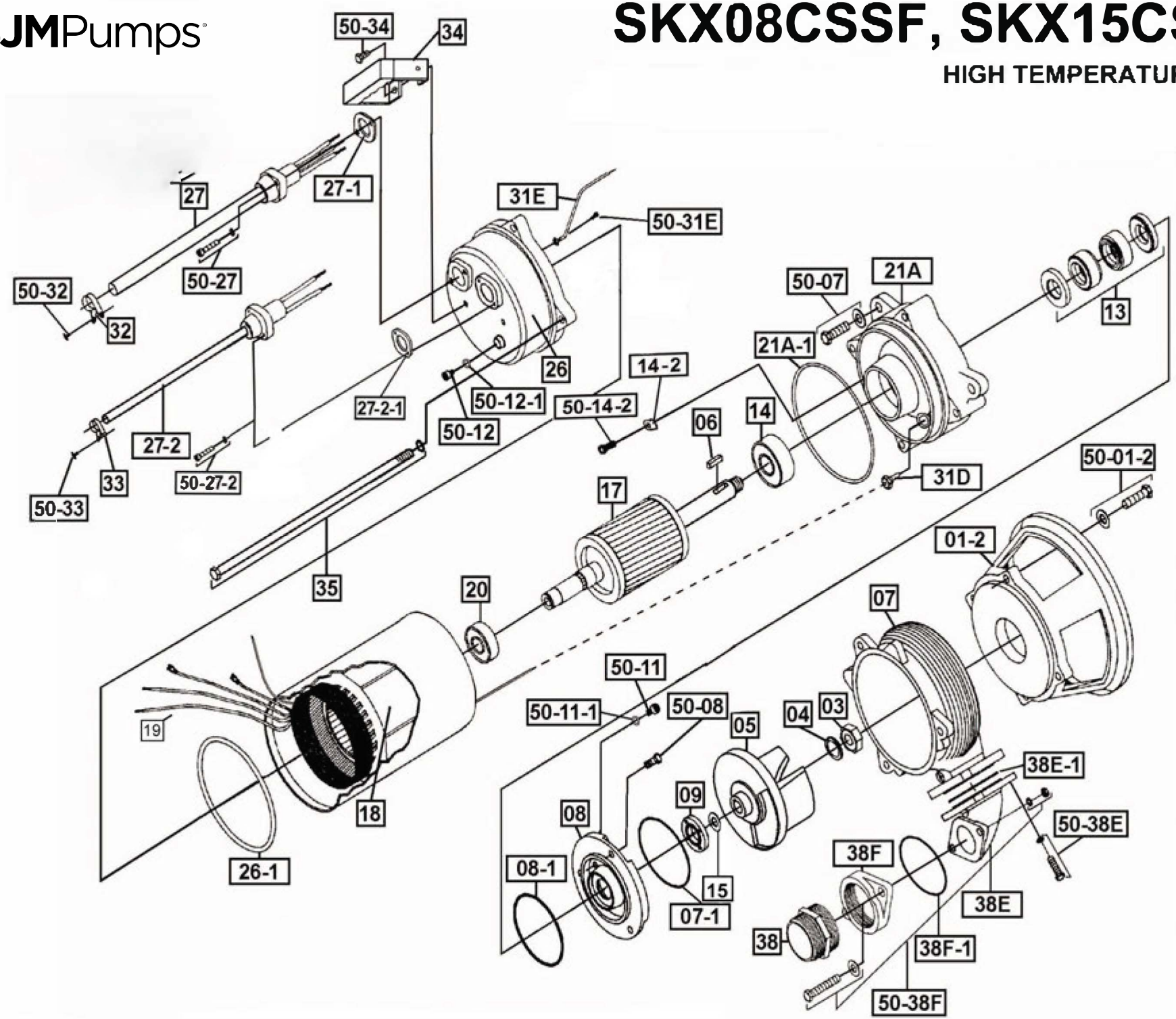

CAT ID# XVIEW SKX08CSSF- SKX15CSSF

BJMPumps

SKX22CSSF, SKX37CSSF

HIGH TEMPERATURE

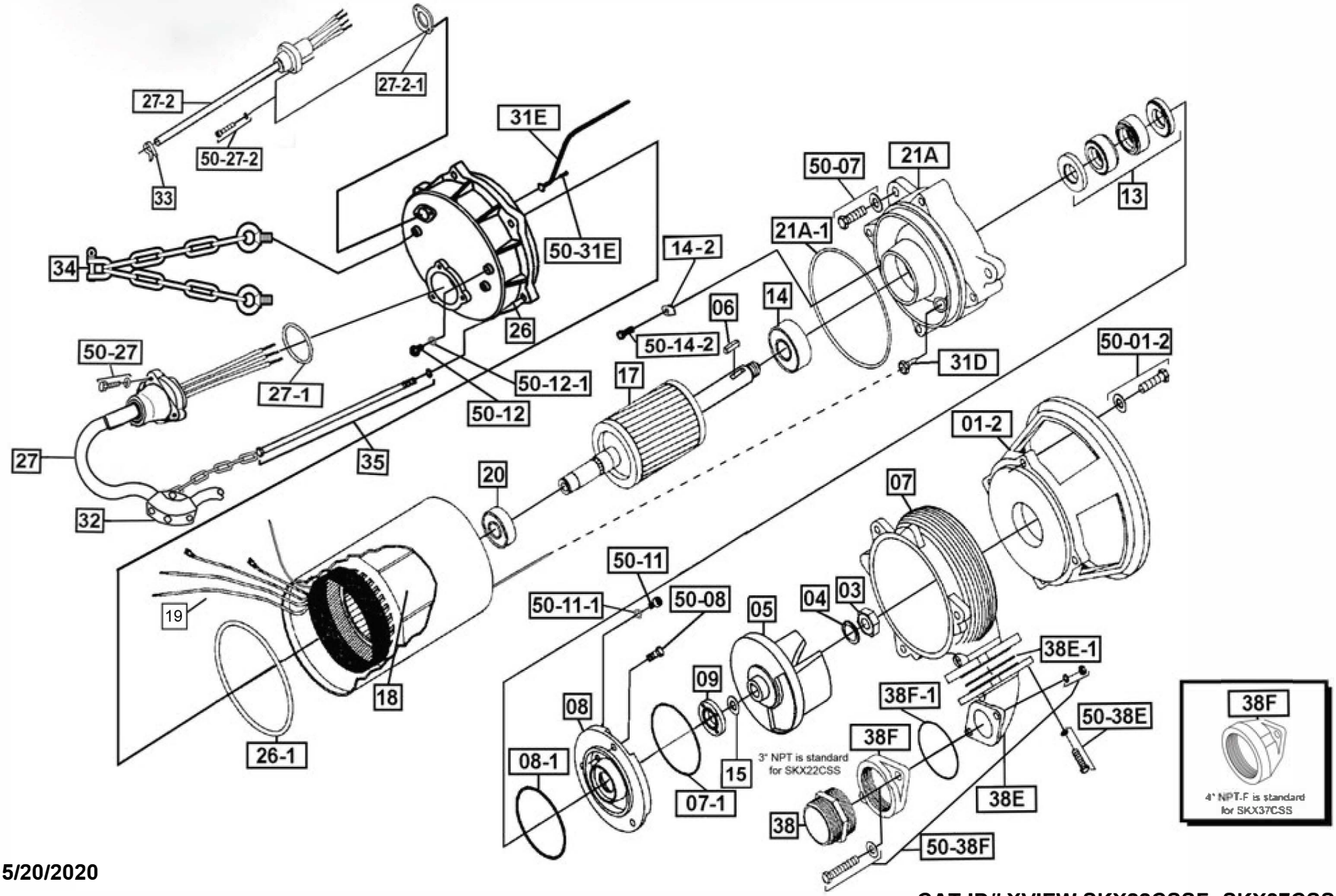

5/20/2020

CAT ID# XVIEW SKX22CSSF- SKX37CSSF

BJMPumps

SKX55CSSF, SKX75CSSF

HIGH TEMPERATURE

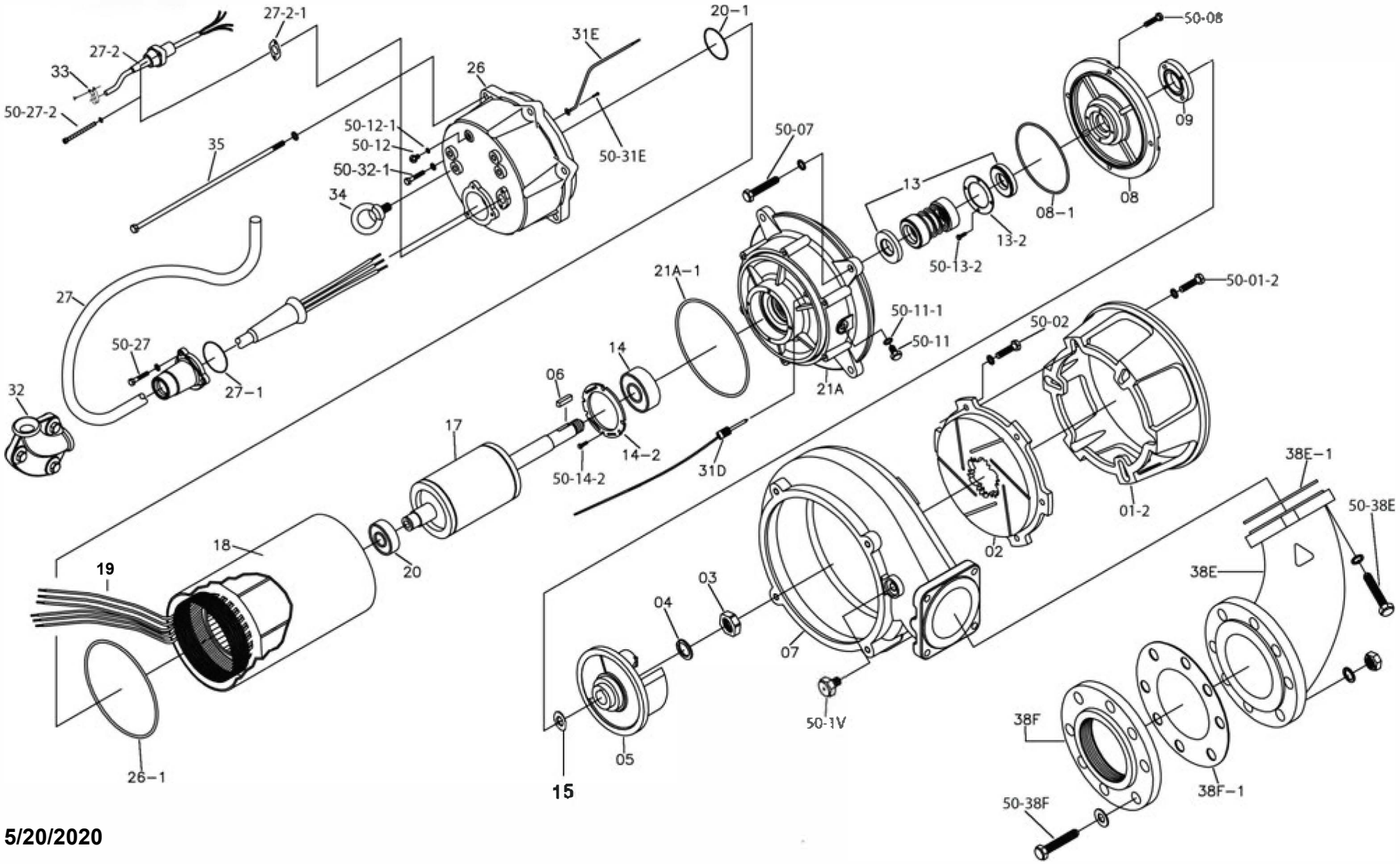

5/20/2020

CAT ID# XVIEW SKX55CSSF- SKX75CSSF

BJMPumps

SKX110CSSF, SKX150CSSF

HIGH TEMPERATURE

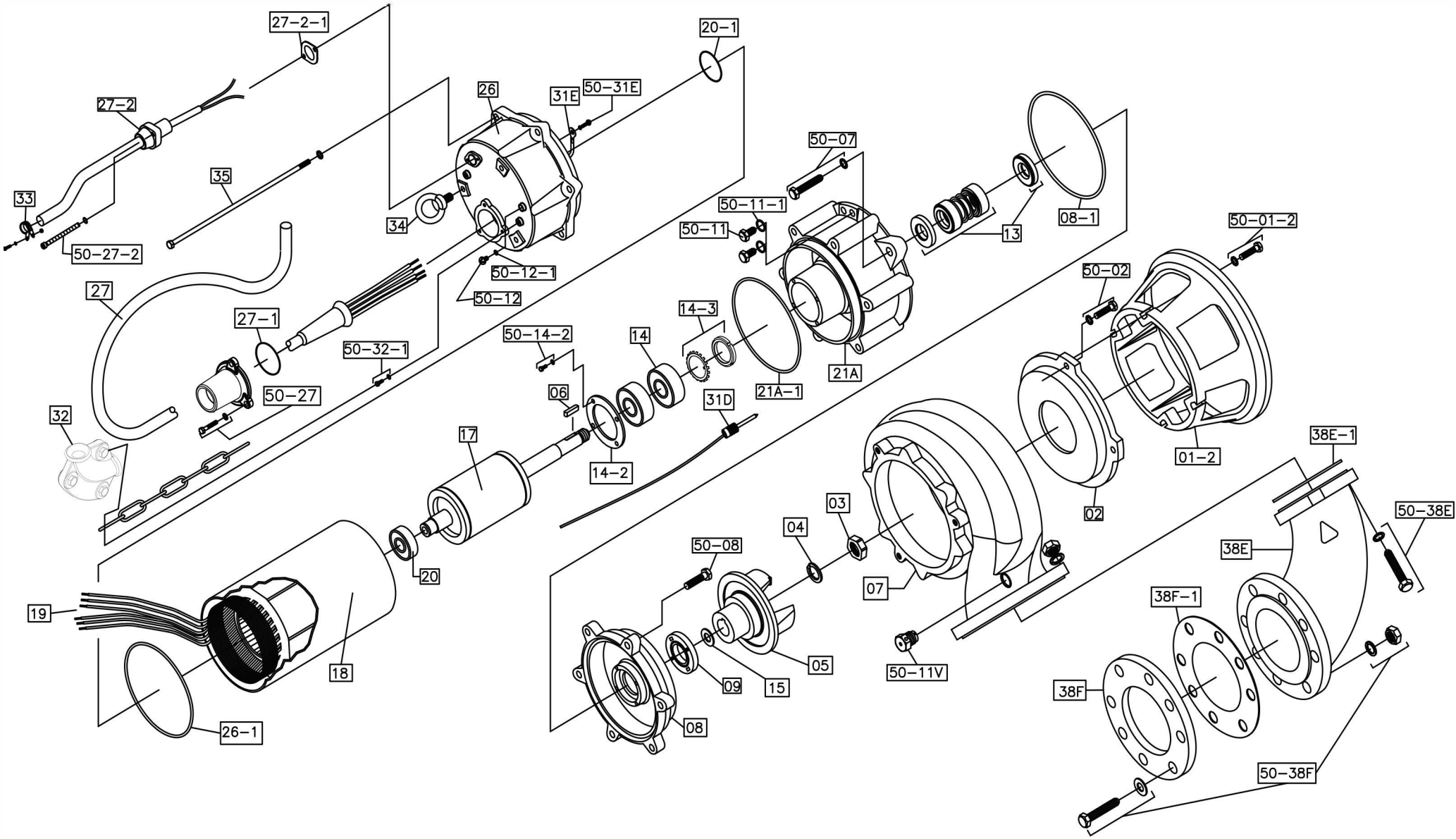

CAT ID# XVIEW SKX110CSSF-SKX150CSSF