STANCOR Pump & Control Solutions	LIST OF PARTS	Trash Pumps SL500-2	
	Drawing Number: DS-A19-017	Rev: *1*	Date: 12/27/2017

Position	Stancor Part #	Description	Qty.
2	30005	CARRYING HANDLE	1
2	30005-1	CARRYING HANDLE (FOR #8 CABLED PUMPS ONLY)	1
3	31217-1	MOTOR HOUSING	1
3	31217-1/NAB	MOTOR HOUSING NICKEL ALUMINUM BRONZE	1
4	31218	TOP COVER	1
4	31218/NAB	NICKEL ALUMINUM BRONZE TOP COVER	1
4	31218-1	TOP COVER LARGE DISCHARGE (4" ONLY)	1
4	31218-1 #8	TOP COVER (LARGE) FOR SPECIAL #8 CABLE ENTRY	1
5	30274	3" SS DISCHARGE CONNECTION, NPT, ANGLED	1
5	30274-1	3" SS STRAIGHT DISCHARGE - CS-2 PUMP ONLY	1
5	30350	4" SS DISCHARGE CONNECTION, NPT, ANGLED	1
6	CE-101	CABLE ENTRY	1
6	CE-102	CABLE ENTRY FOR 10/5 CABLE	1
6	31550 #8	CABLE ENTRY FOR (#8 CABLED PUMPS ONLY)	1
7	CE-103	CABLE CLAMP	1
7	30779	CABLE CLAMP (FOR #8 CABLED PUMPS ONLY)	1
10	31219	BEARING HOUSING	1
11	30015	BEARING RETAINER	1
14	711-151	STRAINER	1
15	31178-1	VANE IMPELLER	1
16	30019-3	OIL HOUSING COVER	1
16	30019-6	OIL HOUSING COVER HH ONLY	1
17	30273-1	SHAFT ASSEMBLY	1
18	30284-2	1 PHASE 230V STATOR	1
18	30284-1	3 PHASE 230/460V STATOR	1
18	30285-1	3 PHASE 575V STATOR	1
18	30284-1/208	208 VOLT 3 PHASE STATOR	1
24	30463-1	CABLE SEALING GLAND – (12/4 CABLE)	1
24	30463-1V	CABLE SEALING GLAND VITON – (12/4 CABLE) (OPTIONAL)	1
24	CE-109	CABLE SEALING GLAND - (12/5 CABLE)	1
24	CE-110	CABLE SEALING GLAND - (10/5 CABLE)	1
29	40181	O-RING	1
29	40181V	O-RING (VITON - OPTIONAL)	1
30	40177	O-RING	5
30	40177V	O-RING (VITON - OPTIONAL)	5
30A	40176	O-RING (SIDE OF OIL HOUSING COVER)	1
31	15921	O-RING	1
31	15921-1	O-RING	1
32	40171	O-RING	1
33	31146-1-CI	ADAPTOR RING	1
38	40129	BEARING LOWER	1
39	40128	BEARING UPPER	1

STANCOR Pump & Control Solutions	LIST OF PARTS	Trash Pumps SL500-2	
	Drawing Number: DS-A19-017	Rev:	Date: 12/27/2017

Position	Stancor Part #	Description	Qty.
40	30048	GASKET	2
43	40225	SCREWS	3
44	40221	ALLEN HEAD SS BOLT	3
45	40221	ALLEN HEAD SS BOLT	2
45	CE-111	SCREWS	2
45	31449	SCREWS (FOR #8 CABLED PUMPS ONLY)	2
46	40485	SCREWS	3
47	40149	NUTS	2
48	40209	SCREWS	2
49	40149	NUTS	2
51	40202	SCREWS	2
52	31418-1	SCREWS (FOR #8 CABLED PUMPS ONLY)	2
54	40108	WASHERS	7
55	40116-1	RUBBERIZED WASHERS	5
56	40115	DUBO RINGS	3
57	40117	DUBO RINGS	1
58	40116	DUBO RING	3
59	50767	IMPELLER KEY	1
60	40667	CIRCLIP	1
62	40187	STUDS	2
63	55005/230	CONTACTOR, 230 VOLT SINGLE PHASE	1
63	55001/230	CONTACTOR, 230 VOLT 3 PHASE	1
63	55001/460	CONTACTOR, 460 VOLT	1
63	55001/575	CONTACTOR, 575 VOLT	1
64	30400	TERMINAL BLOCK	1
65	31151	DISCHARGE COVER	1
66	12/4 CABLE	12/4 CABLE	50 ft
66	12/5 CABLE	12/5 CABLE	50 ft
66	10/5 CABLE	10/5 CABLE	50 ft
**67	30056-1	MECHANICAL SEAL	1
67	30056-1 VIT	MECHANICAL VITON SEAL (OPTIONAL)	1
71	41181	WASHER	1
74	40106	WASHERS	5
75	30463-2	12/4 INSULATOR	1
75	CE-105	12/5 INSULATOR	1
75	CE-106	10/5 INSULATOR	1
75	31457-1	CABLE GLAND (FOR #8 CABLED PUMPS ONLY)	1
76	40216	OIL PLUG	1
77	41260	IMPELLER LOCK NUT	1
79	40224	SCREWS	3
81	40239	SEAL RING	1
84	30813	DATA PLATE	1

STANCOR Pump & Control Solutions	LIST OF PARTS	Trash Pumps SL500-2	
	Drawing Number: DS-A19-017	**Rev:**	**Date:** 12/27/2017

Position	Stancor Part #	Description	Qty.
86	41199	RIVETS	4
88	30078	RUBBER BUSHING	1
89	40218-1	LOCKWASHER	5
91	40215	SCREW	2
98	40150	NUTS	3
99	40227	BOLT	1
101	30465-1	WASHER	2
101	30465-1-S	SS WASHER, 12/4 CABLE (OPTIONAL)	2
101	CE-107	WASHER - 12/5 CABLE	2
101	CE-107-S	SUPPORT WASHER, SS, 12/5 CABLE (OPTIONAL)	2
101	31555	WASHER (FOR #8 CABLED PUMPS ONLY)	1
101	CE-108	WASHER FOR 10/5 CABLE	2
104	31449	SCREWS	4
107	31221-1	SHIM - (NON MSHA PUMPS)	1
108	41306	O-RING	1
109	41305	O-RING	1
115	701-117-1	VOLUTE	1

STANCOR Pump & Control Solutions	Exploded View	Trash Pumps SL500-2
	Dwg: DS-A19-011 **Rev:** 1 **Date:** 12/17	

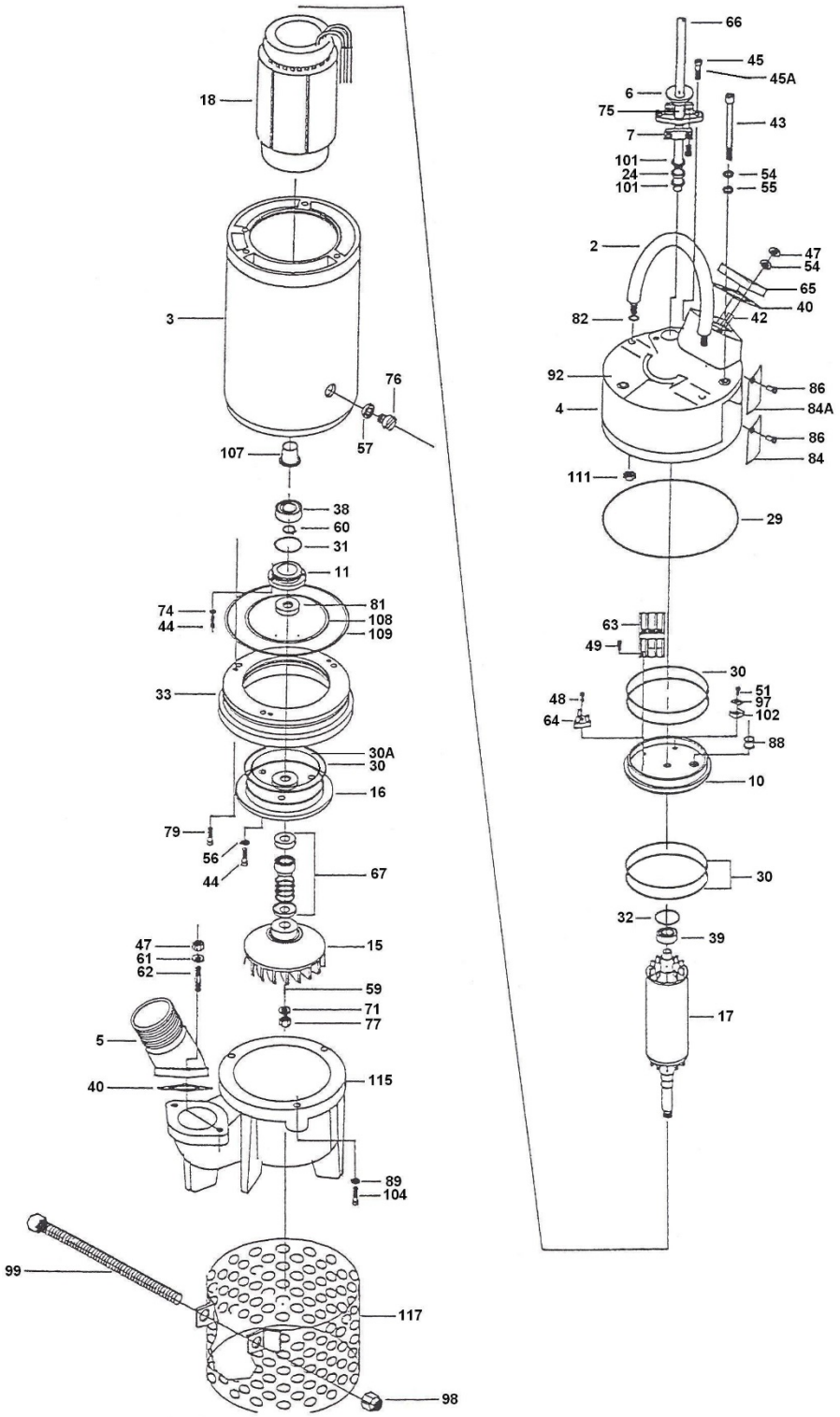

STANCOR Pump & Control Solutions	LIST OF PARTS		Trash Pumps SL750-2			
	Drawing Number:	DS-A19-018	Rev:	2	Date:	1/10/2018

Position	Stancor Part #	Description	Qty.
2	30005-1	CARRYING HANDLE (FOR #8 CABLED PUMPS ONLY)	1
2	30005	CARRYING HANDLE	1
3	31217-1	MOTOR HOUSING	1
3	31217-1/NAB	NICKEL ALUMINUM BRONZE MOTOR HOUSING	1
4	31218	TOP COVER	1
4	31218/NAB	NICKEL ALUMINUM BRONZE TOP COVER	1
4	31218-1	TOP COVER FOR LARGE DISCHARGE	1
4	31218-1 #8	LARGE TOP COVER FOR #8 CABLED PUMPS ONLY	1
5	30274	3" SS ANGLED DISCHARGE	1
5	30274-1	3" SS STRAIGHT DISCHARGE	1
5	30350	4" SS ANGLED DISCHARGE	1
6	CE-101	CABLE ENTRY FOR 12/4 & 12/5 PUMPS	1
6	CE-102	CABLE ENTRY FOR 10/5 PUMPS	1
6	31550 #8	CABLE ENTRY (FOR #8 CABLED PUMPS ONLY)	1
7	CE-103	CABLE CLAMP	1
7	30779	CABLE CLAMP (FOR #8 CABLED PUMPS ONLY)	1
10	31220	BEARING HOUSING	1
10	31220/NAB	NICKEL ALUMINUM BRONZE BEARING HOUSING	1
11	30015	BEARING RETAINER	1
14	711-151	STRAINER	1
15	31178-2	VANE IMPELLER	1
16	30019-3	OIL HOUSING COVER	1
17	30342-1	SHAFT ASSEMBLY	1
18	30959	STATOR 230/460 VOLT 3 PHASE	1
18	30483-2	STATOR 230 VOLT SINGLE PHASE	1
18	30959-1	STATOR 575 VOLT 3 PHASE	1
18	30485	STATOR 3 PHASE 208 VOLT	1
24	30463-1	CABLE SEALING GLAND (12/4 CABLE)	1
24	30463-1V	VITON CABLE SEALING GLAND (12/4 CABLE) (OPTIONAL	1
24	CE-109	CABLE SEALING GLAND (12/5 CABLE)	1
24	CE-110	CABLE SEALING GLAND (10/5 CABLE)	1
29	40181	O-RING	2
29	40181V	VITON O-RING (OPTIONAL)	2
30	40177	O-RING	5
30	40177V	VITON O-RING (OPTIONAL)	5
30A	40176	O-RING	1
31	15921	O-RING	1
32	40171	O-RING	1
33	31146-1-CI	ADAPTOR RING	1
38	40129	LOWER BEARING	1
39	40128	UPPER BEARING	1
40	30048	GASKET	2

STANCOR Pump & Control Solutions	LIST OF PARTS		Trash Pumps SL750-2			
	Drawing Number:	DS-A19-018	Rev:	2	Date:	1/10/2018

Position	Stancor Part #	Description	Qty.
43	40227	SCREW	3
44	40221	ALLEN HEAD SS BOLT	3
45	40221	ALLEN HEAD SS BOLT	2
45	CE-111	SS BOLT (MSHA PUMPS)	2
45	31449	SCREWS (FOR #8 CABLED PUMPS ONLY)	2
46	40485	SCREW	3
47	40149	SCREW	2
48	40209	SCREW	4
51	40202	SCREW - (NON MSHA PUMPS)	1
52	31418-1	SCREWS (FOR #8 CABLED PUMPS ONLY)	2
54	40108	WASHER	8
55	40116-1	RUBBERIZED WASHER	5
56	40115	DUBO RING	3
57	40117	DUBO RING	1
58	40116	DUBO RING	3
59	50767	IMPELLER KEY	1
60	40667	CIRCLIP	1
62	40187	STUD	2
63	55005/230/1	CONTACTOR (230 VOLT 1 PHASE ONLY	1
63	55001/230	CONTACTOR 230 VOLT 3 PHASE	1
63	55001/460	CONTACTOR 460 VOLT 3 PHASE	1
63	55001/575	CONTACTOR 575 VOLT 3 PHASE	1
64	30400	TERMINAL BLOCK	1
65	31151	DISCHARGE COVER	1
66	12/5 CABLE	12/5 CABLE	50 ft.
66	12/4 CABLE	12/4 CABLE	50 ft.
66	10/5 CABLE	10/5 CABLE	50 ft.
67	30056-1	LOWER SEAL UNIT	1
67	30056-1 VIT	VITON MECHANICAL SEAL (OPTIONAL)	1
71	41181	WASHER	1
74	40106	WASHER	2
75	30463-2	12/4 INSULATOR	1
75	CE-105	12/5 INSULATOR	1
75	CE-106	10/5 INSULATOR	1
75	31457-1	CABLE GLAND (FOR #8 CABLED PUMPS ONLY)	1
76	40216	SCREW	1
77	41260	LOCKNUT	1
79	40224	SCREW	3
81	40239	SEAL RING	1
84	30813	DATA PLATE	1
86	41199	RIVETS	4
88	30078	RUBBER BUSHING	1

STANCOR Pump & Control Solutions	LIST OF PARTS		Trash Pumps SL750-2			
	Drawing Number:	DS-A19-018	Rev:	2	Date:	1/10/2018

Position	Stancor Part #	Description	Qty.
89	41372	10MM LOCKWASHER	5
91	40215-1	SCREW	2
98	40150	LOCKNUT	3
99	40227	SCREW	1
101	30465-1	WASHER - 12/4 CABLE	2
101	30465-1-S	SS WASHER, 12/4 CABLE (OPITIONAL)	2
101	CE-107	WASHER - 12/5 CABLE	2
101	CE-107-S	SUPPORT WASHER, SS, 12/5 CABLE (OPITIONAL)	2
101	31555	WASHER (FOR #8 CABLED PUMPS ONLY)	1
101	CE-108	WASHER FOR 10/5 CABLE	2
104	31449-1	SCREW	2
104	40224	SCREW	1
107	31221	SHIELD	1
108	41306	O-RING	1
109	41305	O-RING	1
115	701-117-1	VOLUTE	1

STANCOR Pump & Control Solutions	**Exploded View**	**Trash Pumps SL750-2**
	Dwg: DS-A19-005 **Rev:** 1 **Date:** 12/17	

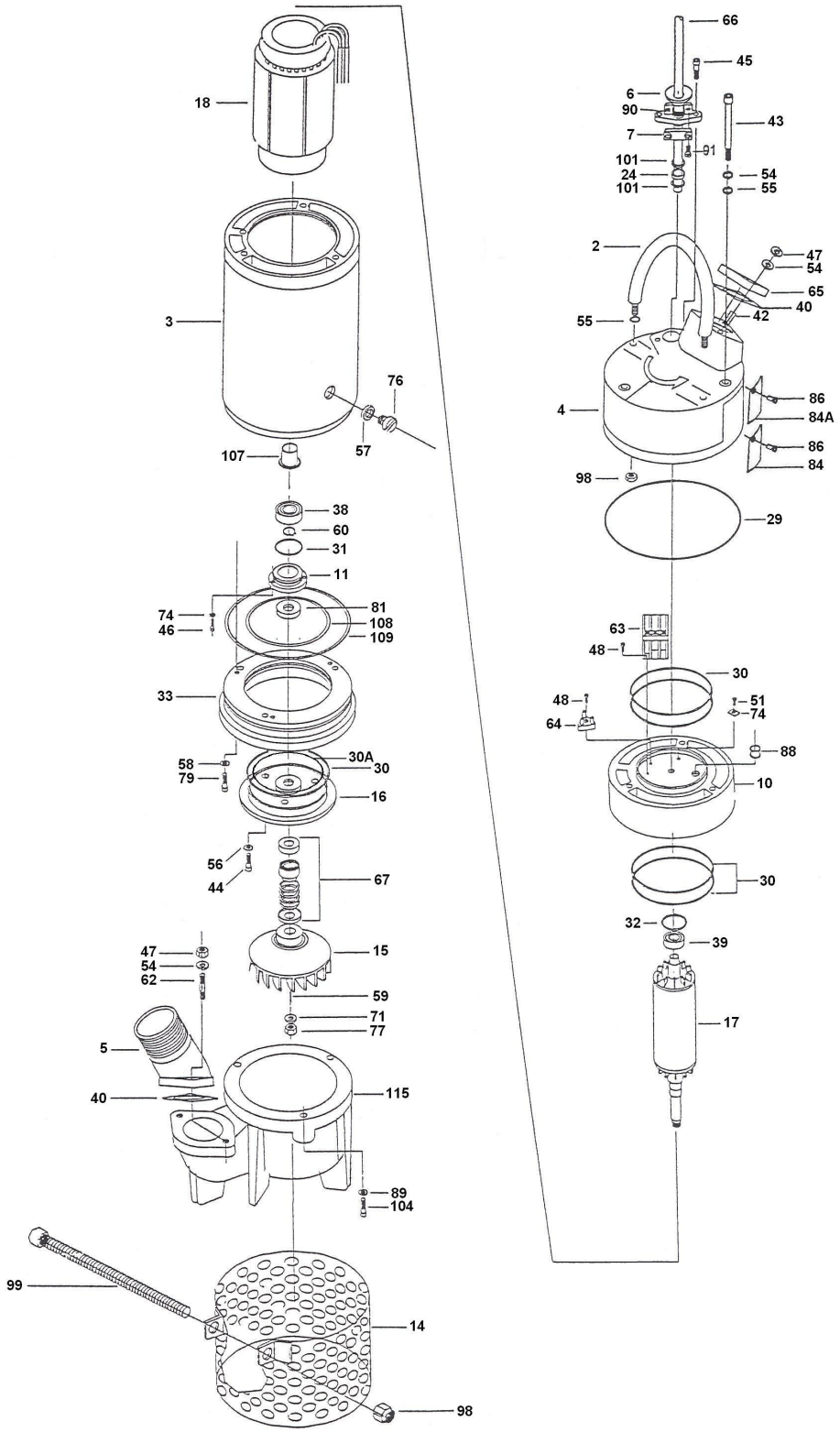

STANCOR Pump & Control Solutions	LIST OF PARTS		Trash Pumps SL1000SS-2			
	Drawing Number:	DS-A19-049	Rev:	-	Date:	1/21/2019

Position	Stancor Part #	Description	Qty.
1	706-90-1-S	MECHANICAL SEAL UNIT VITON SS PUMP	1
5	706-74	LIP SEAL	2
6	706-77	BUSHING	1
7	700-113-S	MOTOR HOUSING - SS PUMP ONLY	1
8	31307	STATOR - 460 V	1
8	31308	STATOR - 575 V	1
9	31607	ROTOR	1
10	704-113	OIL HOUSING	1
11	707-128-S	BEARING HOUSING (UPPER)-SS PUMP ONLY	1
12	707-129-S	BEARING HOUSING (LOWER)-SS PUMP ONLY	1
13	707-130	BEARING RETAINER	1
16	30078	RUBBER BUSHING	1
17	709-154-S	TOP COVER - SS PUMP ONLY	1
21	30813	NAMEPLATE	1
22	CE-112	MSHA TAG	1
27	750-02	BEARING, UPPER	1
28	750-05	BEARING, LOWER	1
29	751-25	0-RING, (LOWER BRG. RETAINER)	1
30	751-91	0-RING, (LOWER BRG. HOUSING)	1
31	751-93	0-RING, (OIL HOUSING)	1
32	751-114	0-RING, (UPPER BRG. HOUSING)	1
33	751-115	0-RING, HEAD	1
34	40667	CIRCLIP, (UPPER BEARING)	1
35	752-07	CIRCLIP, (LOWER BEARING)	1
37	40218	OIL PLUG	2
38	753-151	STUD, HEAD	4
40	754-103	CAP SCREW (OIL HOUSING)	4
41	754-134	CAP SCREW (BRG. RETAINER)	8
43	40150	LOCK NUT	5
44	50770	KEY	1
45	40115	DUBO-RING	2
49	41199	RIVET	4
51	40104	LOCK WASHER	10
52	41372	LOCK WASHER (VOLUTE)	4
53	40108	FLAT WASHER	10
54	751-04	0-RING (UPPER BRG. BORE)	1
55	710-06-1	HANDLE	1
56	754-32	NUT (HANDLE)	2
57	754-31	LOCK NUT (HANDLE)	4
58	40217	GROUND SCREW	1

STANCOR Pump & Control Solutions	LIST OF PARTS		Trash Pumps SL1000SS-2			
	Drawing Number:	DS-A19-019	Rev:	-	Date:	1/21/2019

Position	Stancor Part #	Description	Qty.
60	759-23	CRIMP CONNECTOR	1
63	754-93	CAP SCREW	4
77	10/5 CABLE	10/5 CABLE	50 (FEET)
77	12/4 CABLE	12/4 CABLE	50 (FEET)
78	CE-101	CABLE ENTRY 12/4 CABLE	1
78	CE-102	CABLE ENTRY 10/5 CABLE	1
79	CE-103	CABLE CLAMP	1
80	30465-1	WASHER 12/4	1
80	CE-108	WASHER 10/5	1
81	30463-1	CABLE GLAND 12/4	1
81	CE-110	CABLE GLAND 10/5	1
82	31418	CAP SCREW	2
86	30463-2	CABLE CLAMP INSULATOR 12/4	1
86	CE-106	CABLE CLAMP INSULATOR 10/5	1
101	707-117-1	PUMP VOLUTE	1
102	31611	IMPELLER - 140MM	1
102	31610	IMPELLER - 160MM	1
103	30274-1	3" THREADED NPT DISCHARGE (STRAIGHT)	1
103	30274	3" THREADED NPT DISCHARGE (ANGLED)	1
103	30350	4" THREADED NPT DISCHARGE (ANGLED)	1
104	713-70-1	IMPELLER WASHER	1
105	40187	STUD (DISCHARGE CONNECTION)	2
106	40220	CAP SCREW (IMPELLER)	1
107	754-140	CAP SCREW (VOLUTE)	4
108	40149	NUT (DISCHARGE)	2
109	40218-1	LOCK WASHER (IMPELLER BOLT)	1
110	30048	GASKET	1
111	711-151	STRAINER	1
112	40227	CAP SCREW (STRAINER)	1
113	50906	DIN RAIL	1
114	55001/460	CONTACTOR - 460 V	1
114	55001/575	CONTACTOR - 575 V	1
115	40202	RAIL MOUNTING SCREWS	2
116	40106	STAR WASHER	2
-	31147-S	STAND+SS PUMP ONLY	1

STANCOR Pump & Control Solutions	**Exploded View**	**Trash Pumps SL1000-2**
	Dwg: DS-A19-015 **Rev:** 1 **Date:** 12/17	

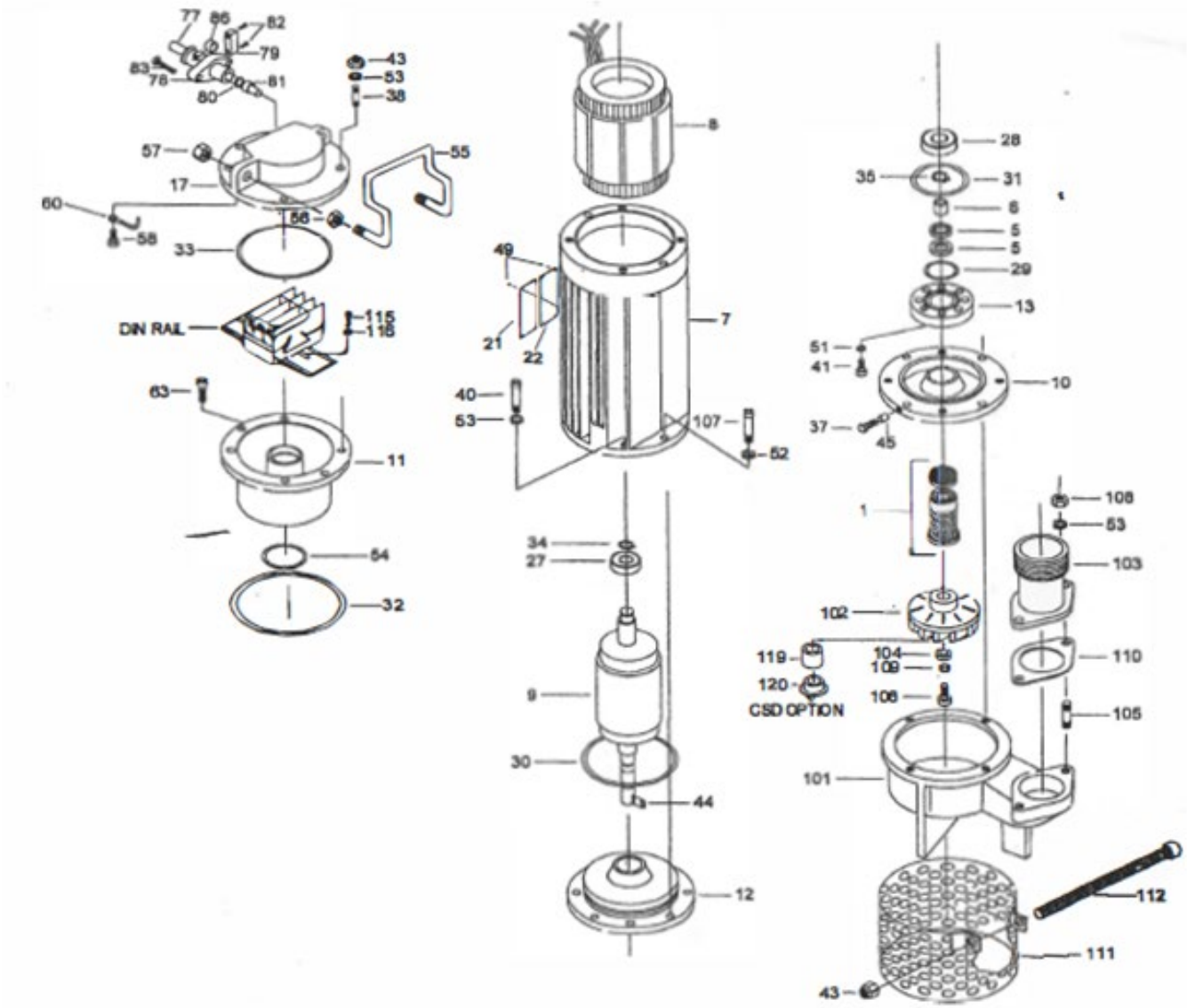

STANCOR Pump & Control Solutions	LIST OF PARTS		Trash Pumps SL1000SS-2			
	Drawing Number:	DS-A19-049	Rev:	-	Date:	1/22/2019

Position	Stancor Part #	Description	Qty.
1	706-90-1-S	MECHANICAL SEAL UNIT VITON SS PUMP	1
5	706-74	LIP SEAL	2
6	706-77	BUSHING	1
7	700-113-S	MOTOR HOUSING - SS PUMP ONLY	1
8	31307	STATOR - 460 V	1
8	31308	STATOR - 575 V	1
9	31607	ROTOR	1
10	704-113	OIL HOUSING	1
11	707-128-S	BEARING HOUSING (UPPER)- SS PUMP ONLY	1
12	707-129-S	BEARING HOUSING (LOWER)- SS PUMP ONLY	1
13	707-130	BEARING RETAINER	1
16	30078	RUBBER BUSHING	1
17	709-154-S	TOP COVER- SS PUMP ONLY	1
21	30813	NAMEPLATE	1
22	CE-112	MSHA TAG	1
27	750-02	BEARING, UPPER	1
28	750-05	BEARING, LOWER	1
29	751-25	O-RING, (LOWER BRG. RETAINER)	1
30	751-91	O-RING, (LOWER BRG. HOUSING)	1
31	751-93	O-RING, (OIL HOUSING)	1
32	751-114	O-RING, (UPPER BRG. HOUSING)	1
33	751-115	O-RING, HEAD	1
34	40667	CIRCLIP, (UPPER BEARING)	1
35	752-07	CIRCLIP, (LOWER BEARING)	1
37	40218	OIL PLUG	2
38	753-151	STUD, HEAD	4
40	754-103	CAP SCREW (OIL HOUSING)	4
41	754-134	CAP SCREW (BRG. RETAINER)	8
43	40150	LOCK NUT	5
44	50770	KEY	1
45	40115	DUBO-RING	2
49	41199	RIVET	4
51	40104	LOCK WASHER	10
52	41372	LOCK WASHER (VOLUTE)	4
53	40108	FLAT WASHER	10
54	751-04	O-RING (UPPER BRG. BORE)	1
55	710-06-1	HANDLE	1
56	754-32	NUT (HANDLE)	2
57	754-31	LOCK NUT (HANDLE)	4
58	40217	GROUND SCREW	1
60	759-23	CRIMP CONNECTOR	1
63	754-93	CAP SCREW	4

STANCOR Pump & Control Solutions	LIST OF PARTS		Trash Pumps SL1000SS-2			
	Drawing Number:	DS-A19-019	Rev:	-	Date:	1/22/2019

Position	Stancor Part #	Description	Qty.
77	10/5 CABLE	10/5 CABLE	50 (FEET)
77	12/4 CABLE	12/4 CABLE	50 (FEET)
78	CE-101	CABLE ENTRY 12/4 CABLE	1
78	CE-102	CABLE ENTRY 10/5 CABLE	1
79	CE-103	CABLE CLAMP	1
80	30465-1	WASHER 12/4	1
80	CE-108	WASHER 10/5	1
81	30463-1	CABLE GLAND 12/4	1
81	CE-110	CABLE GLAND 10/5	1
82	31418	CAP SCREW	2
86	30463-2	CABLE CLAMP INSULATOR 12/4	1
86	CE-106	CABLE CLAMP INSULATOR 10/5	1
101	707-117-1	PUMP VOLUTE	1
102	31611	IMPELLER - 140MM-SS PUMP ONLY	1
103	30274-1	3" THREADED NPT DISCHARGE (STRAIGHT)	1
103	30274	3" THREADED NPT DISCHARGE (ANGLED)	1
103	30350	4" THREADED NPT DISCHARGE (ANGLED)	1
104	713-70-1	IMPELLER WASHER	1
105	40187	STUD (DISCHARGE CONNECTION)	2
106	40220	CAP SCREW (IMPELLER)	1
107	754-140	CAP SCREW (VOLUTE)	4
108	40149	NUT (DISCHARGE)	2
109	40218-1	LOCK WASHER (IMPELLER BOLT)	1
110	30048	GASKET	1
111	711-151	STRAINER	1
112	40227	CAP SCREW (STRAINER)	1
113	50906	DIN RAIL	1
114	55001/460	CONTACTOR - 460 V	1
114	55001/575	CONTACTOR - 575 V	1
115	40202	RAIL MOUNTING SCREWS	2
116	40106	STAR WASHER	2
-	31147-S	STAND+ SS PUMP ONLY	1

STANCOR Pump & Control Solutions	**Exploded View**	**Trash Pumps SL1000SS-2**
	Dwg: DS-A19-048 **Rev:** - **Date:** 1/19	

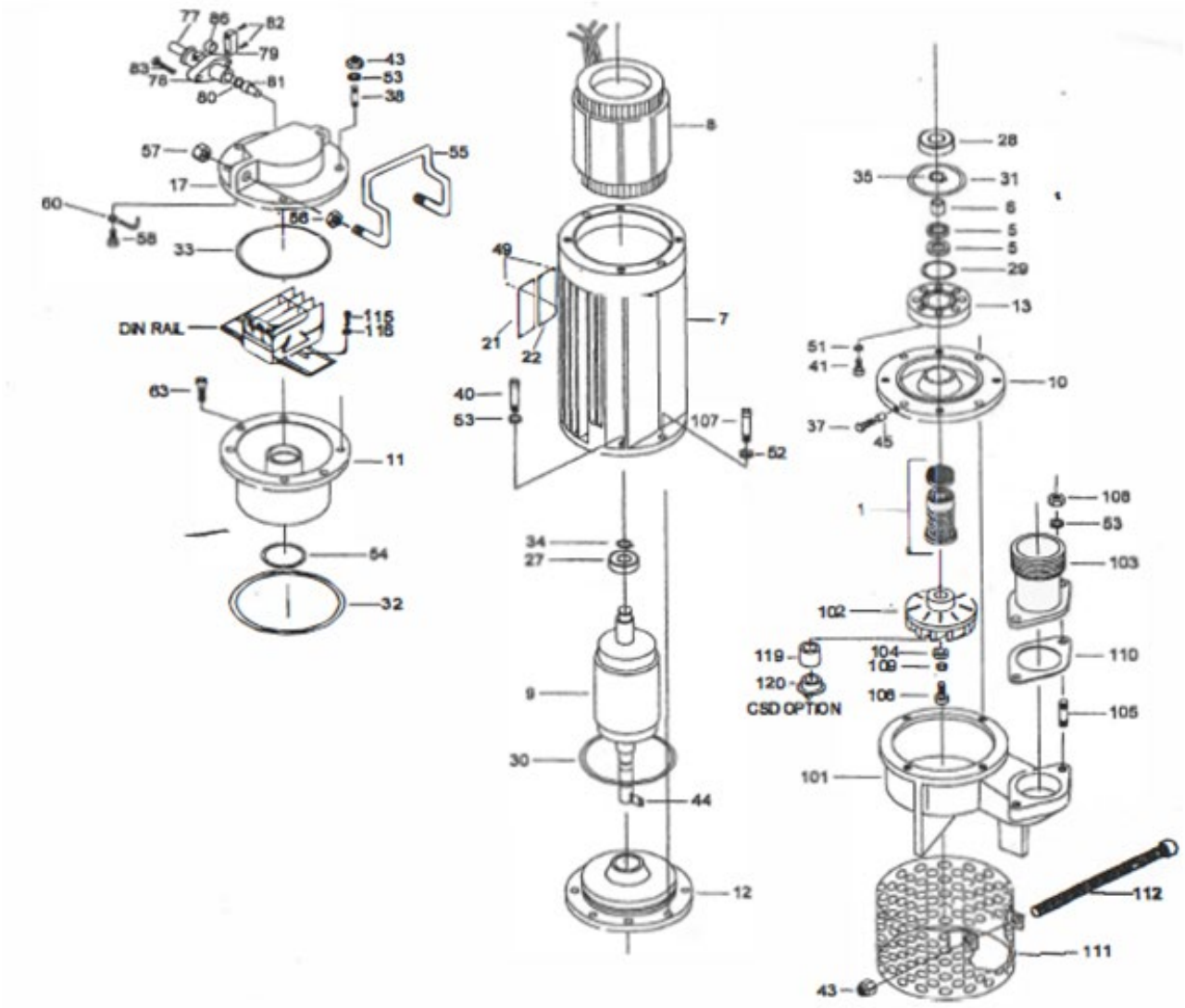

STANCOR Pump & Control Solutions	LIST OF PARTS	Trash Vortex Pumps S1500-TS4P	
	Drawing Number: DS-A24-008	**Rev:** 1	**Date:** 3/15/2017

Position	Stancor Part #	Description	Qty.
1	41194	Screw	3
2	41181-2	Lock Washer	3
3	152-002-1-CI1	Stand	1
4	411-016-1-SS1	Screw	4
5	150-004-1-SS1	Strainer	1
7	330-002-1-NP2	Discharge Gasket	1
8	161-001-1-CI2	Discharge Elbow	1
9	411-015-1-SS1	Screw	4
10	111-001-1-CI2	Volute	1
11	422-001-1-SS1	Washer	4
12	431-001-1-SS1	Nut	4
13	425-001-1-SS4	Impeller washer	1
14	411-018-1-SS1	Screw	1
15	41181-2	Lock Washer	1
16	440-004-1-SS3	Key	1
17	122-003-1-CI2	Impeller	1
-	122-004-1-CI2	Impeller (optional)	-
18	310-003-1-XX2	Lower Seal Assembly	1
19	411-014-1-SS1	Screw	3
20	40115	Dubo Ring	3
21	213-004-1-SS2	Lower Seal Housing	1
22	320-012-1-BN1	O-Ring	1
23	453-003-1-CS1	Retaining Ring	1
24	421-007-1-SS1	Support Washer	1
25	31620	Upper Seal Assembly	1
26	320-013-1-BN1	O-Ring	1
27	40117	Dubo Ring	2
28	40216	Screw	2
29	40221	Screw	6
30	40218-1	Lock Washer	6
31	213-003-1-DI1	Upper Seal Housing	1
32	320-011-1-BN1	O-Ring	1
33	41375	Lock Washer	6
34	411-013-1-SS1	Screw	6
35	41278	Lip Seal	1
36	453-005-1-SS5	Spiral Ring	1
37	41185-1	Lower Bearing	1
38	211-004-1-CI1P1	Motor Housing	1
39	240-005-1-XXX	Stator	1
40	230-005-1-XXX	Rotor Assembly	1
42	30813	Nameplate	1
43	41199	Rivet	4
44	40268-1	Upper Bearing	1
45	41180	O-Ring	1
46	30821	Bearing Cover	1
47	41190	O-Ring	1
48	40208	Screw	3
49	434-001-1-ZN1	Tee Nut	1
50	41192	O-Ring	1

STANCOR Pump & Control Solutions	LIST OF PARTS	Trash Vortex Pumps S1500-TS4P	
	Drawing Number: DS-A24-008	**Rev:** 1	**Date:** 3/15/2017

Position	Stancor Part #	Description	Qty.
51	31573	Stator Lead Grommet	1
52	40181	O-Ring	1
53	31573-2	Washer	1
54	411-017-1-S1	Screw	1
55	31576-1	Contactor Plate	1
56	721-002-1-XXX	Ring Terminal	3
57	41181-2	Lockwasher	8
58	41203-1	Screw	8
59	30724-1	Washer	3
60	40208	Screw	1
61	30400	Terminal block	1
62	41203	Screw	3
63	55015/460	Contactor	1
64	212-004-1-CI1P1	Upper Bearing Housing	1
65	721-001-1-XXX	Connector for thermal	3
66	431-002-1-SS1	Nut	2
67	41372	Lock Washer	3
68	411-019-1-SS1	Screw	3
69	224-003-1-SS1	Lifting Lug	2
70	223-002-1-CI1P1	Top Cover	1
71	31556	Washer S.S.	1
72	31457	Cable Gland	1
73	31555	Washer Nylon	1
74	31418	Strain Relief Clamp, Screw	2
75	6/3G-GC	Cable (Feet)	50
76	31449	Screw	2
77	CB-817	Lock Wire	2
78	30779	Strain Relief Clamp,	1
79	620-002-1-SS1	Cable Entry	1
80	41192	O Ring	2
81	830-001-1-OIL	Motor Oil (Quarts)	2.4
82	31380	Shield	1
83	402117	Screw	2
84	414-003-1-PL2	Plastic Plug	2

STANCOR Pump & Control Solutions	CROSS SECTION	Trash Vortex Pumps S1500-TS4P	
	Drawing Number: DS-A24-005	**Rev:**	**Date:** 5/26/2016

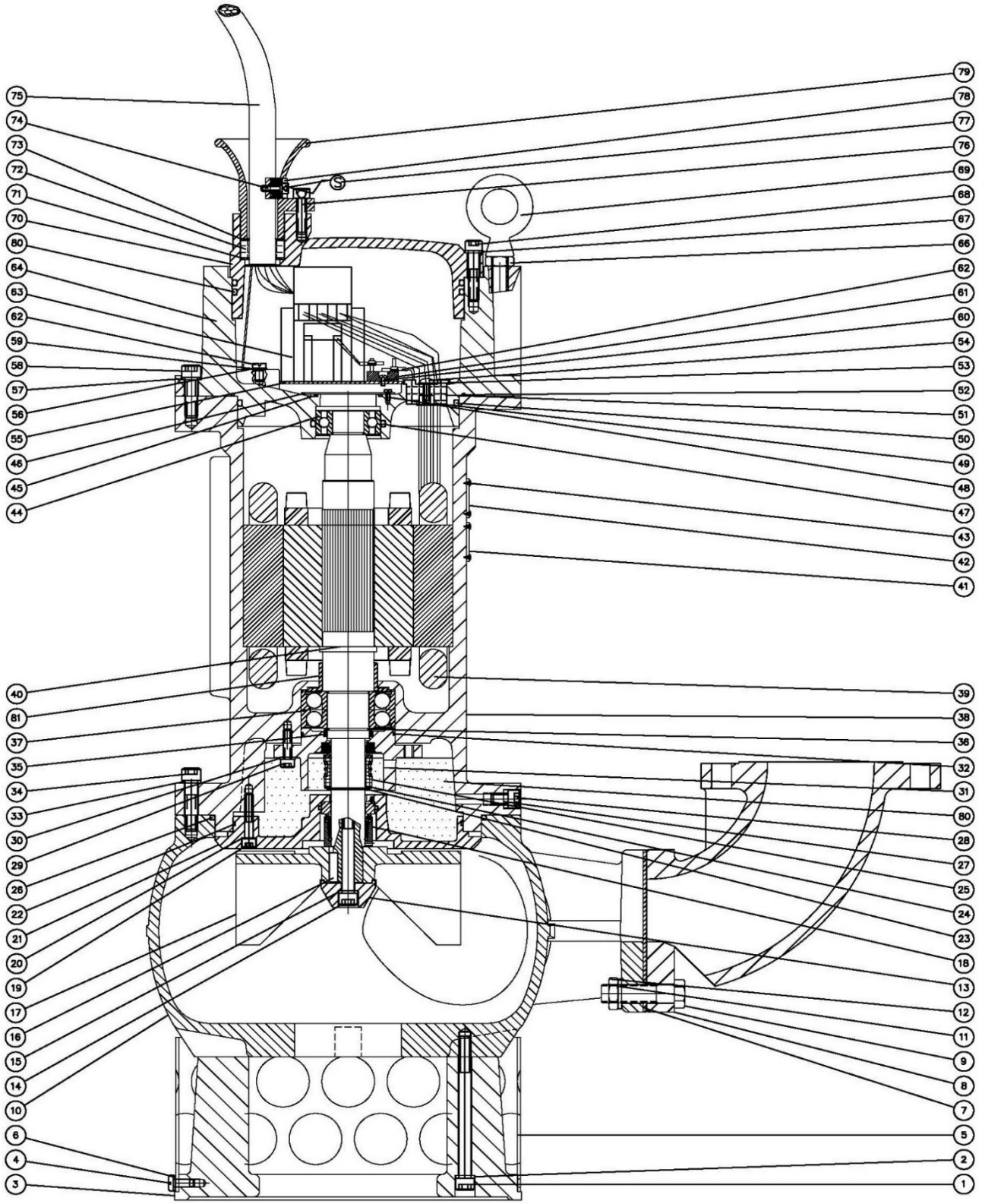

STANCOR Pump & Control Solutions	LIST OF PARTS	Trash Vortex Pumps S2000-TS4P	
	Drawing Number: DS-A24-009	**Rev:** 1	**Date:** 3/15/2017

Position	Stancor Part #	Description	Qty.
1	41194	Screw	3
2	41181-2	Lock Washer	3
3	152-002-1-CI1	Stand	1
4	411-016-1-SS1	Screw	4
5	150-004-1-SS1	Strainer	1
7	330-002-1-NP2	Discharge Gasket	1
8	161-001-1-CI2	Discharge Elbow	1
9	411-015-1-SS1	Screw	4
10	111-001-1-CI2	Volute	1
11	422-001-1-SS1	Washer	4
12	431-001-1-SS1	Nut	4
13	425-001-1-SS4	Impeller washer	1
14	411-018-1-SS1	Screw	1
15	41181-2	Lock Washer	1
16	440-004-1-SS3	Key	1
17	122-002-1-CI2	Impeller	1
-	122-003-1-CI2	Impeller (optional)	-
18	310-003-1-XX2	Lower Seal Assembly	1
19	411-014-1-SS1	Screw	3
20	40115	Dubo Ring	3
21	213-004-1-SS2	Lower Seal Housing	1
22	320-012-1-BN1	O-Ring	1
23	453-003-1-CS1	Retaining Ring	1
24	421-007-1-SS1	Support Washer	1
25	31620	Upper Seal Assembly	1
26	320-013-1-BN1	O-Ring	1
27	40117	Dubo Ring	2
28	40216	Screw	2
29	40221	Screw	6
30	40218-1	Lock Washer	6
31	213-003-1-DI1	Upper Seal Housing	1
32	320-011-1-BN1	O-Ring	1
33	41375	Lock Washer	6
34	411-013-1-SS1	Screw	6
35	41278	Lip Seal	1
36	453-005-1-SS5	Spiral Ring	1
37	41185-1	Lower Bearing	1
38	211-004-1-CI1P1	Motor Housing	1
39	240-004-1-XXX	Stator	1
40	230-004-1-XXX	Rotor Assembly	1
42	30813	Nameplate	1
43	41199	Rivet	4
44	40268-1	Upper Bearing	1
45	41180	O-Ring	1
46	30821	Bearing Cover	1
47	41190	O-Ring	1
48	40208	Screw	3
49	434-001-1-ZN1	Tee Nut	1
50	41192	O-Ring	1

STANCOR Pump & Control Solutions	LIST OF PARTS	Trash Vortex Pumps S2000-TS4P	
	Drawing Number: DS-A24-009	**Rev:** 1	**Date:** 3/15/2017

Position	Stancor Part #	Description	Qty.
51	31573	Stator Lead Grommet	1
52	40181	O-Ring	1
53	31573-2	Washer	1
54	411-017-1-S1	Screw	1
55	31576-1	Contactor Plate	1
56	721-002-1-XXX	Ring Terminal	3
57	41181-2	Lockwasher	8
58	41203-1	Screw	8
59	30724-1	Washer	3
60	40208	Screw	1
61	30400	Terminal block	1
62	41203	Screw	3
63	55015/460	Contactor	1
64	212-004-1-CI1P1	Upper Bearing Housing	1
65	721-001-1-XXX	Connector for thermal	3
66	431-002-1-SS1	Nut	2
67	41372	Lock Washer	3
68	411-019-1-SS1	Screw	3
69	224-003-1-SS1	Lifting Lug	2
70	223-002-1-CI1P1	Top Cover	1
71	31556	Washer S.S.	1
72	31457	Cable Gland	1
73	31555	Washer Nylon	1
74	31418	Strain Relief Clamp, Screw	2
75	6/3G-GC	Cable (Feet)	50
76	31449	Screw	2
77	CB-817	Lock Wire	2
78	30779	Strain Relief Clamp,	1
79	620-002-1-SS1	Cable Entry	1
80	41192	O Ring	2
81	830-001-1-OIL	Motor Oil (Quarts)	2.4
82	31380	Shield	1
83	402117	Screw	2
84	414-003-1-PL2	Plastic Plug	2

STANCOR Pump & Control Solutions	CROSS SECTION	Trash Vortex Pumps S2000-TS4P	
	Drawing Number: DS-A24-006	**Rev:**	**Date:** 5/26/2016

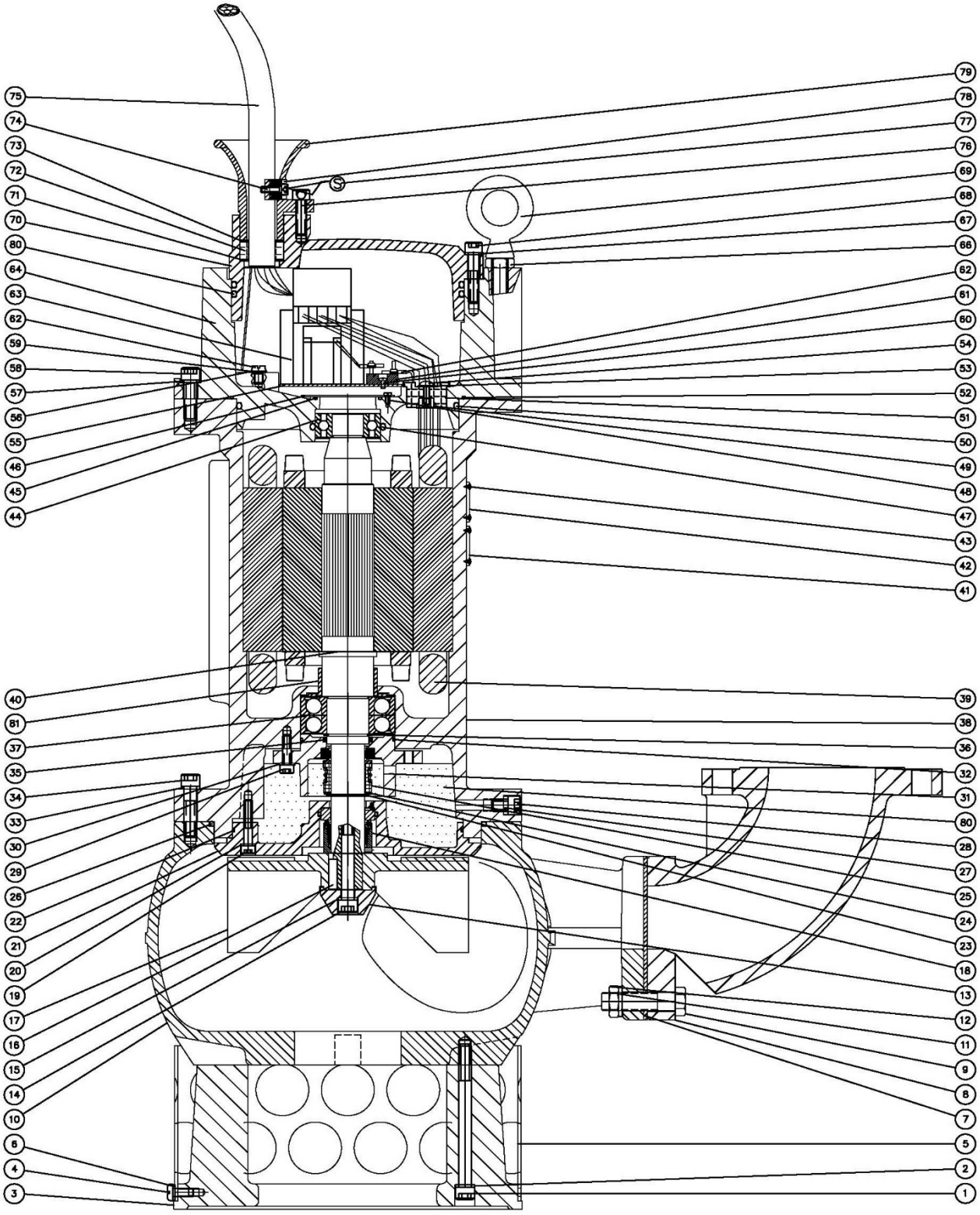

STANCOR Pump & Control Solutions	LIST OF PARTS	Trash Vortex Pumps S3000-TS4P	
	Drawing Number: DS-A24-010	**Rev:** 1	**Date:** 3/15/2017

Position	Stancor Part #	Description	Qty.
1	41194	Screw	3
2	41181-2	Lock Washer	3
3	152-002-1-CI1	Stand	1
4	411-016-1-SS1	Screw	4
5	150-004-1-SS1	Strainer	1
7	330-002-1-NP2	Discharge Gasket	1
8	161-001-1-CI2	Discharge Elbow	1
9	411-015-1-SS1	Screw	4
10	111-001-1-CI2	Volute	1
11	422-001-1-SS1	Washer	4
12	431-001-1-SS1	Nut	4
13	425-001-1-SS4	Impeller washer	1
14	411-018-1-SS1	Screw	1
15	41181-2	Lock Washer	1
16	440-004-1-SS3	Key	1
17	122-001-1-CI2	Impeller	1
-	122-002-1-CI2	Impeller (optional)	-
18	310-003-1-XX2	Lower Seal Assembly	1
19	411-014-1-SS1	Screw	3
20	40115	Dubo Ring	3
21	213-004-1-SS2	Lower Seal Housing	1
22	320-012-1-BN1	O-Ring	1
23	453-003-1-CS1	Retaining Ring	1
24	421-007-1-SS1	Support Washer	1
25	31620	Upper Seal Assembly	1
26	320-013-1-BN1	O-Ring	1
27	40117	Dubo Ring	2
28	40216	Screw	2
29	40221	Screw	6
30	40218-1	Lock Washer	6
31	213-003-1-DI1	Upper Seal Housing	1
32	320-011-1-BN1	O-Ring	1
33	41375	Lock Washer	6
34	411-013-1-SS1	Screw	6
35	41278	Lip Seal	1
36	453-005-1-SS5	Spiral Ring	1
37	41185-1	Lower Bearing	1
38	211-003-1-CI1P1	Motor Housing	1
39	240-003-1-XXX	Stator	1
40	230-003-1-XXX	Rotor Assembly	1
42	30813	Nameplate	1
43	41199	Rivet	4
44	40268-1	Upper Bearing	1
45	41180	O-Ring	1
46	30821	Bearing Cover	1
47	41190	O-Ring	1
48	40208	Screw	3
49	434-001-1-ZN1	Tee Nut	1
50	41192	O-Ring	1

STANCOR Pump & Control Solutions	LIST OF PARTS	Trash Vortex Pumps S3000-TS4P	
	Drawing Number: DS-A24-010	**Rev:** 1	**Date:** 3/15/2017

Position	Stancor Part #	Description	Qty.
51	31573	Stator Lead Grommet	1
52	40181	O-Ring	1
53	31573-2	Washer	1
54	411-017-1-S1	Screw	1
55	31576-1	Contactor Plate	1
56	721-002-1-XXX	Ring Terminal	3
57	41181-2	Lockwasher	8
58	41203-1	Screw	8
59	30724-1	Washer	3
60	40208	Screw	1
61	30400	Terminal block	1
62	41203	Screw	3
63	55015/460	Contactor	1
64	212-004-1-CI1P1	Upper Bearing Housing	1
65	721-001-1-XXX	Connector for thermal	3
66	431-002-1-SS1	Nut	2
67	41372	Lock Washer	3
68	411-019-1-SS1	Screw	3
69	224-003-1-SS1	Lifting Lug	2
70	223-002-1-CI1P1	Top Cover	1
71	31556	Washer S.S.	1
72	31457	Cable Gland	1
73	31555	Washer Nylon	1
74	31418	Strain Relief Clamp, Screw	2
75	6/3G-GC	Cable (Feet)	50
76	31449	Screw	2
77	CB-817	Lock Wire	2
78	30779	Strain Relief Clamp,	1
79	620-002-1-SS1	Cable Entry	1
80	41192	O Ring	2
81	830-001-1-OIL	Motor Oil (Quarts)	2.4
82	31380	Shield	1
83	402117	Screw	2
84	414-003-1-PL2	Plastic Plug	2

STANCOR Pump & Control Solutions	CROSS SECTION	Trash Vortex Pumps S3000-TS4P	
	Drawing Number: DS-A24-007	**Rev:**	**Date:** 5/26/2016

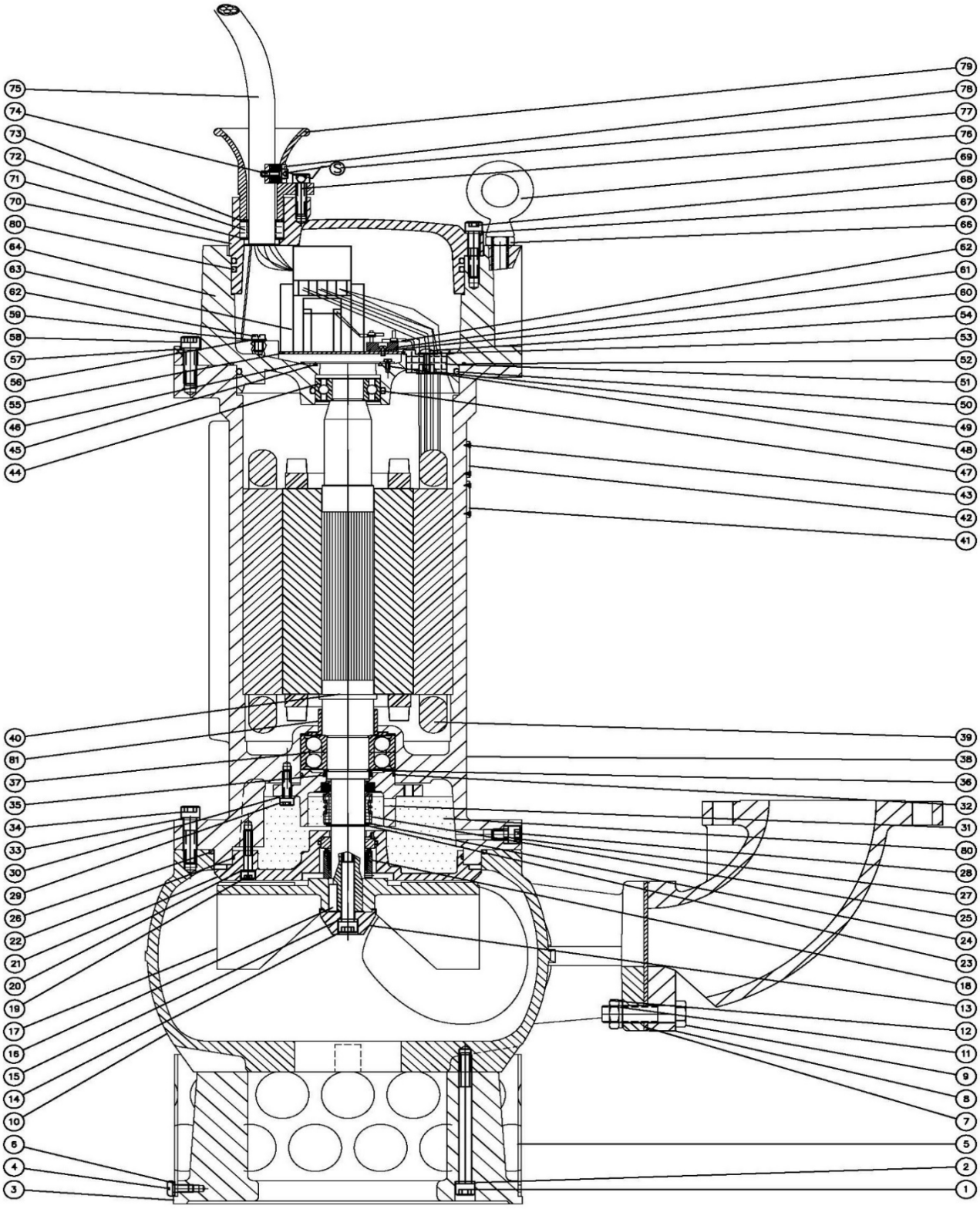

STANCOR Pump & Control Solutions	LIST OF PARTS	Trash Vortex Pumps S3000-TS4P V6	
	Drawing Number: DS-A24-036	**Rev:**	**Date:** 8/16/2019

Position	Stancor Part #	Description	Qty.
1	41194	Screw	3
2	41181-2	Lock Washer	3
3	152-002-1-CI1	Stand	1
4	330-003-1-NP2	Discharge Gasket	1
5	163-001-1-DI2	Discharge Flange	1
6	411-030-1-SS1	Screw	4
7	111-007-1-DI2	Volute	1
8	425-001-2-SS4	Impeller washer	1
9	411-018-1-SS1	Screw	1
10	41181-2	Lock Washer	1
11	440-004-1-SS3	Key	1
12	122-020-1-DI2	Impeller	1
13	310-003-1-XX2	Lower Seal Assembly	1
14	CE-111	Screw	3
15	40115	Dubo Ring	3
16	213-031-1-SS2	Lower Seal Housing	1
17	320-020-1-BN1	O-Ring	1
18	453-003-1-CS1	Retaining Ring	1
19	421-007-1-SS1	Support Washer	1
20	31620	Upper Seal Assembly	1
21	320-020-1-BN1	O-Ring	1
22	40117	Dubo Ring	2
23	40216	Screw	2
24	40221	Screw	6
25	40218-1	Lock Washer	6
26	213-003-1-DI1	Upper Seal Housing	1
27	320-011-1-BN1	O-Ring	1
28	422-002-1-SS1	Lock Washer	6
29	411-029-1-SS1	Screw	6
30	41278	Lip Seal	1
31	453-005-1-SS5	Retaining Ring	1
32	41185-1	Lower Bearing	1
33	211-003-2-CI1P1	Motor Housing	1
34	240-003-1-480	Stator	1
-	240-003-1-600	Stator	1
35	230-003-1-XXX	Rotor Assembly	1
36	CE-112	MSHA Tag	1
37	30813	Nameplate	1
38	41199	Rivet	8
39	40268-1	Upper Bearing	1
40	41180	O-Ring	1
41	30821	Bearing Cover	1
42	41190	O-Ring	1
43	40208	Screw	3
44	434-001-1-GS1	Tee Nut	1
45	41192	O-Ring	1
46	31573	Stator Lead Grommet	1
47	40181	O-Ring	1

STANCOR Pump & Control Solutions	LIST OF PARTS	Trash Vortex Pumps S3000-TS4P V6	
	Drawing Number: DS-A24-036	**Rev:**	**Date:** 8/16/2019

Position	Stancor Part #	Description	Qty.
48	31573-2	Washer	1
49	411-017-1-S1	Screw	1
50	31576-1	Contactor Plate	1
51	721-002-1-XXX	Ring Terminal	3
52	41181-2	Lockwasher	8
53	41203-1	Screw	8
54	30724-1	Washer	3
55	40208	Screw	1
56	30400	Terminal block	1
57	41203	Screw	3
58	55015/460	Contactor	1
59	212-004-1-CI1P1	Upper Bearing Housing	1
60	721-001-1-XXX	Connector for thermal	3
61	431-002-1-SS1	Nut	2
62	41372	Lock Washer	3
63	411-019-1-SS1	Screw	3
64	224-003-1-SS1	Lifting Lug	2
65	223-002-1-CI1P1	Top Cover	1
66	31556	Washer S.S.	1
67	31457	Cable Gland	1
68	31555	Washer Nylon	1
69	31418	Strain Relief Clamp, Screw	2
70	610-017-1	Cable (Feet)	50
71	31449	Screw	2
72	CB-817	Lock Wire	2
73	30779	Strain Relief Clamp,	1
74	620-002-1-SS1	Cable Entry	1
75	41192	O Ring	2
76	830-001-1-OIL	Motor Oil (Quarts)	2.4
77	31380	Shield	1
78	402117	Screw	2
79	414-003-1-PL2	Plastic Plug	2
80	151-008-1-SS1	Adapter Ring	1
81	411-028-1-SS1	Screw,Hex head	4
82	422-003-1-SS1	Lock Washer	4
83	750-001-1-CU1	Ferrule,4 AWG	3

STANCOR Pump & Control Solutions	Exploded View	Trash Vortex Pumps S3000-TS4P V6
	Dwg: DS-A24-039 **Rev:** **Date:** 8/19	

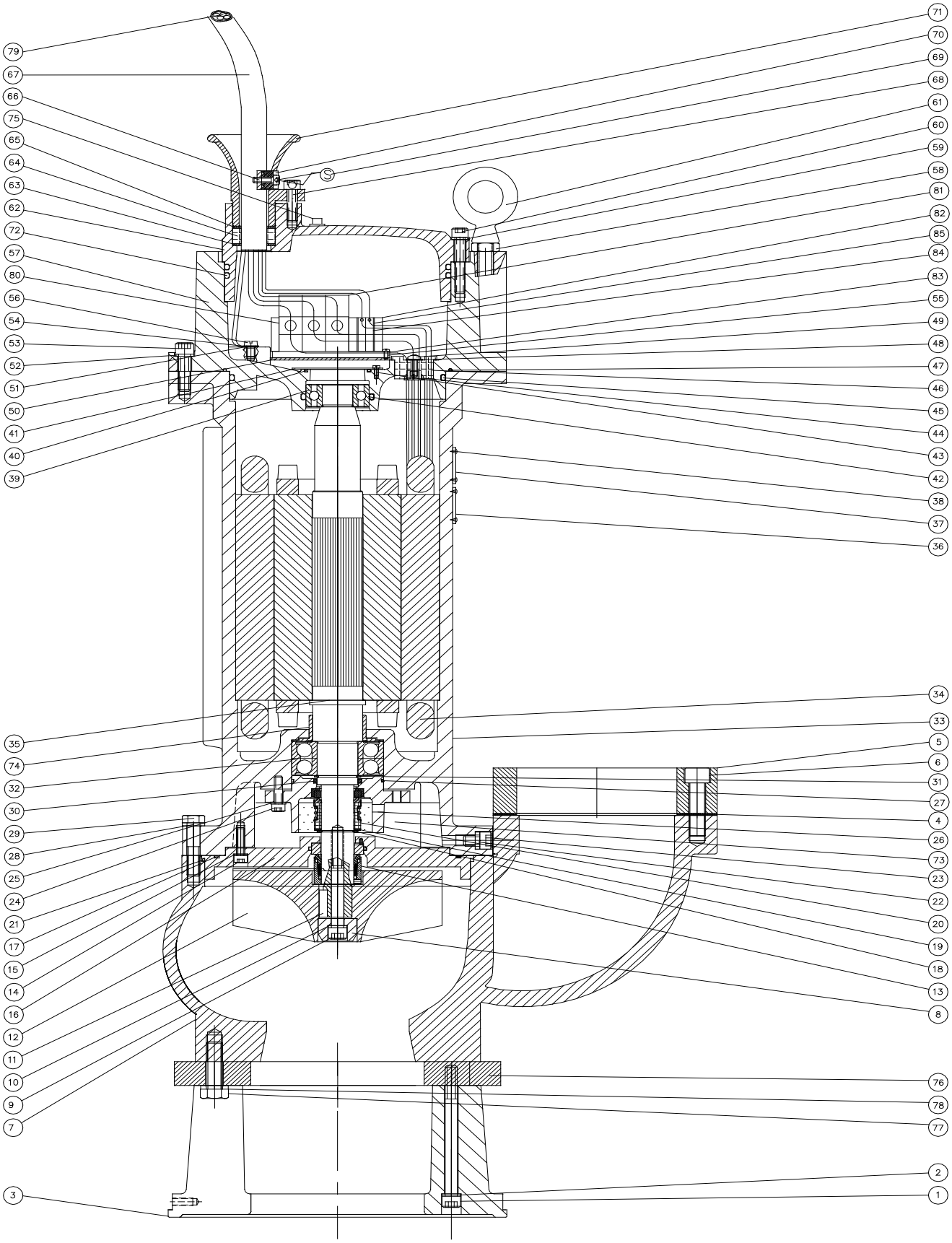

Specifications subject to change without notice